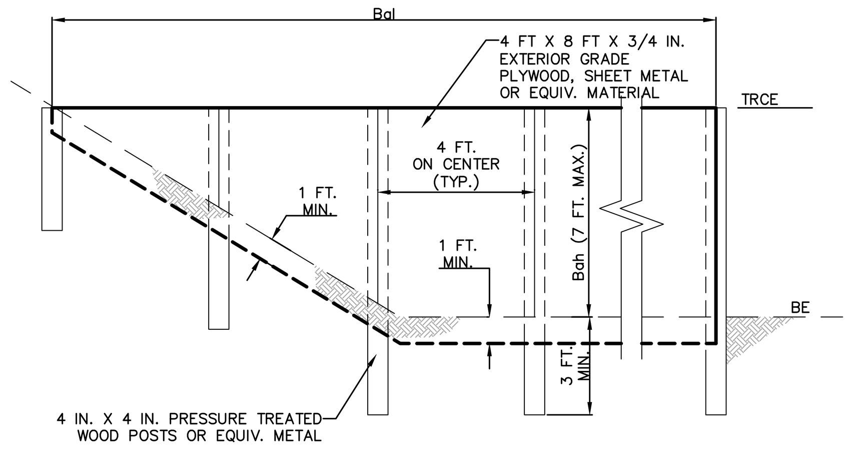

BASIN OR TRAP NO.	BAFFLE		TEMPORARY RISER	BOTTOM
	LENGTH Bal (FT)	HEIGHT Bah (FT)	CREST ELEV. TRCE (FT)	BOTTOM ELEV BE (FT)
BASIN 1	192	6	302.71	298.00
BASIN 2	71	8	297.38	291.00
TRAP 1	93	3	294.00	292.00

NOTES:

SEE APPROPRIATE BASIN DETAIL FOR PROPER LOCATION AND ORIENTATION.

AN ACCEPTABLE ALTERNATIVE IS TO INSTALL A SUPER SILT FENCE AT THE BAFFLE LOCATION

IN POOLS WITH DEPTHS EXCEEDING 7', THE TOP OF THE PLYWOOD BAFFLE DOES NOT NEED TO EXTEND TO THE TEMPORARY RISER CREST. SUPER SILT FENCE BAFFLES NEED NOT EXTEND TO TRCE ELEVATION.

BAFFLES SHALL BE TIED INTO ONE SIDE OF THE BASIN UNLESS OTHERWISE SHOWN ON THE PLAN DRAWINGS.

SUBSTITUTION OF MATERIALS NOT SPECIFIED IN THIS DETAIL SHALL BE APPROVED BY THE DEPARTMENT OR THE LOCAL CONSERVATION DISTRICT BEFORE INSTALLATION.

DAMAGED OR WARPED BAFFLES SHALL BE REPLACED WITHIN 7 DAYS OF INSPECTION.

BAFFLES REQUIRING SUPPORT POSTS SHALL NOT BE INSTALLED IN BASINS REQUIRING IMPERVIOUS LINERS.

STANDARD CONSTRUCTION DETAIL #7-14
BAFFLE

NOT TO SCALE

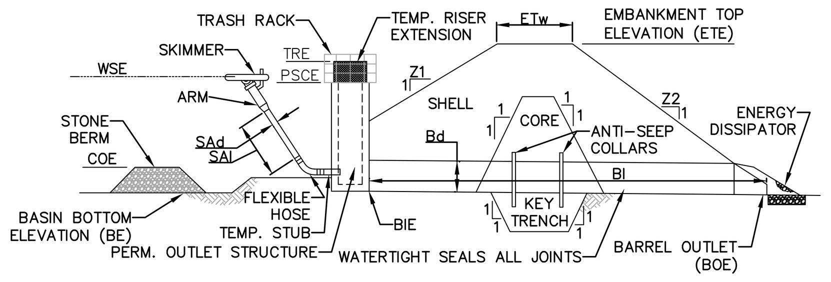

BASIN /TRAP NO.	Z1 (FT)	Z2 (FT)	TEMP RISER EXT. ELEV TRE (FT)	EMBANKMENT				CLEAN OUT ELEV COE (FT)	BOTTOM ELEV BE (FT)
				TOP ELEV ETE (FT)	TOP WIDTH ETw (FT)	KEY TRENCH DEPTH (FT)	KEY TRENCH WIDTH (FT)		
BASIN 1	3	4	302.71	305	10	2	4	299.42	298.00
BASIN 2	3	4	297.38	300.00	10	2	4	293.25	291.00

SKIMMER			OUTLET BARREL				
DIA SAd (IN)	LENGTH SAl (FT)	MAT'L	DIA Bd (IN)	INLET ELEV BIE (FT)	MAT'L	LENGTH Bl (FT)	OUTLET ELEV BOE (FT)
2.5	4.0	PVC	36	298	RCP	63	297
2.5	4.0	PVC	30	291.00	RCP	27	290.79

NOTES:

SEDIMENT BASINS, INCLUDING ALL APPURTENANT WORKS, SHALL BE CONSTRUCTED TO THE DETAIL AND DIMENSIONS SHOWN ON THE E&S PLAN DRAWINGS.

AREA UNDER EMBANKMENT SHALL BE CLEARED, GRUBBED, AND STRIPPED OF TOPSOIL TO A DEPTH OF TWO FEET PRIOR TO ANY PLACEMENT AND COMPACTION OF EARTHEN FILL. IN ORDER TO FACILITATE MAINTENANCE AND RESTORATION, THE POOL AREA SHALL BE CLEARED OF ALL BRUSH, TREES, AND OBJECTIONABLE MATERIAL. FILL MATERIAL FOR THE EMBANKMENTS SHALL BE FREE OF ROOTS, OR OTHER WOODY VEGETATION, ORGANIC MATERIAL, LARGE STONES, AND OTHER OBJECTIONABLE MATERIALS. THE EMBANKMENT SHALL BE COMPACTED IN LAYERED LIFTS OF NOT MORE THAN 6 TO 9 IN. THE MAXIMUM ROCK SIZE SHALL BE NO GREATER THAN 2/3 THE LIFT THICKNESS.

UPON COMPLETION, THE EMBANKMENT SHALL BE SEEDED, MULCHED, BLANKETED OR OTHERWISE STABILIZED ACCORDING TO THE SPECIFICATIONS OF THE E&S PLAN DRAWINGS. TREES SHALL NOT BE PLANTED ON THE EMBANKMENT.

INSPECT ALL SEDIMENT BASINS ON AT LEAST A WEEKLY BASIS AND AFTER EACH RUNOFF EVENT. PROVIDE ACCESS FOR SEDIMENT REMOVAL AND OTHER REQUIRED MAINTENANCE ACTIVITIES. A CLEAN OUT STAKE SHALL BE PLACED NEAR THE CENTER OF EACH BASIN. ACCUMULATED SEDIMENT SHALL BE REMOVED WHEN IT HAS REACHED THE CLEAN OUT ELEVATION ON THE STAKE AND THE BASIN RESTORED TO ITS ORIGINAL DIMENSIONS. DISPOSE OF MATERIALS REMOVED FROM THE BASIN IN THE MANNER DESCRIBED IN THE E&S PLAN.

BASIN EMBANKMENTS, SPILLWAYS, AND OUTLETS SHALL BE INSPECTED FOR EROSION, PIPING AND SETTLEMENT. NECESSARY REPAIRS SHALL BE IMMEDIATELY. DISPLACED RIPRAP WITHIN THE OUTLET ENERGY DISSIPATER SHALL BE REPLACED IMMEDIATELY.

ACCUMULATED SEDIMENT SHALL BE REMOVED AND DISTURBED AREAS SHALL BE STABILIZED INSIDE THE BASIN BEFORE CONVERSION TO A STORMWATER MANAGEMENT FACILITY. THE DEVICE SHOWN IN STANDARD CONSTRUCTION DETAIL #7-16 MAY BE USED TO DEWATER SATURATED SEDIMENT PRIOR TO ITS REMOVAL. ROCK FILTERS SHALL BE ADDED AS NECESSARY.

ALL BASIN EMBANKMENTS SHOULD BE COMPACTED BY SHEEPSFOOT OR PAD ROLLER. THE LOOSE LIFT THICKNESS SHOULD BE 9 INCHES OR LESS, DEPENDING ON ROLLER SIZE, AND THE MAXIMUM PARTICLE SIZE IS 6 INCHES OR LESS – 2/3 LIFT THICKNESS. FIVE PASSES OF THE COMPACTION EQUIPMENT OVER THE ENTIRE SURFACE OF EACH LIFT IS REQUIRED. EMBANKMENT COMPACTION TO VISIBLE NON-MOVEMENT IS ALSO REQUIRED.

STANDARD CONSTRUCTION DETAIL #7-4
SEDIMENT BASIN EMBANKMENT AND SPILLWAY DETAILS - SKIMMER

NOT TO SCALE

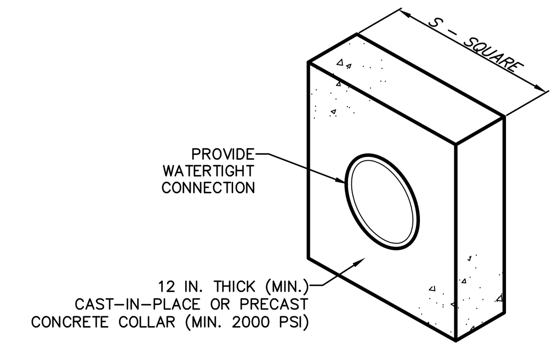

BASIN OR TRAP NO.	PIPE SIZE (IN)	S (IN)	NO. OF COLLARS	RISER TO FIRST COLLAR (FT)	COLLAR SPACING (FT)
BASIN 1	24	72	3	10	10
BASIN 2	30	72	3	10	10
TRAP 1	30	60	2	10	10

NOTES:

ALL COLLARS SHALL BE INSTALLED SO AS TO BE WATERTIGHT.

COLLAR SIZE AND SPACING SHALL BE AS INDICATED WITHIN TABLE.

STANDARD CONSTRUCTION DETAIL #7-16
CONCRETE ANTI-SEEP COLLAR FOR PERMANENT BASINS OR TRAPS

NOT TO SCALE

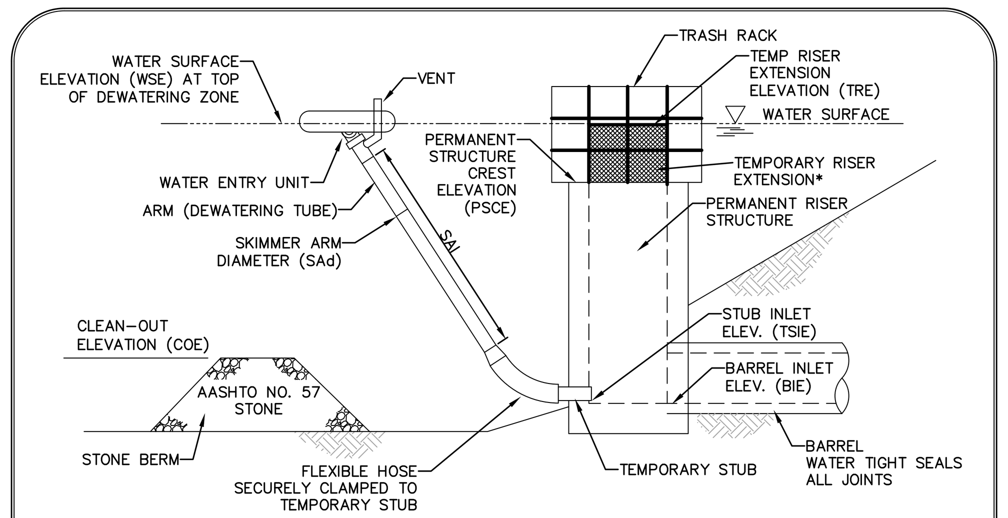

SECTION VIEW

BASIN NO.	WATER SURFACE ELEV. WSE (FT)	SKIMMER							
		ORIFICE		ARM			FLEXIBLE HOSE		
		DIA. (IN)	HEAD (IN)	DIA. SAd (IN)	LENGTH SAL (FT)	MAT'L	DIA. (IN)	LENGTH (IN)	MAT'L
BASIN 1	304.00	2.5	2.5	3	7.0	PVC	3	12	PVC
BASIN 2	299.00	2.5	2.5	3	9.0	PVC	3	12	PVC
TRAP 1	343.50	2.0	2.0	3	3.0	PVC	3	12	PVC

TEMPORARY STUB			PERMANENT RISER			RISER EXTENSION			BARREL
INSIDE DIA (IN)	INVERT ELEV TSIE (FT)	MAT'L	CREST ELEV PSCE (FT)	HORIZ OPENING LENGTH El (IN)	HORIZ OPENING WIDTH Ew (IN)	CREST ELEV TRE (FT)	HORIZ OPENING LENGTH (IN)	HORIZ OPENING WIDTH (IN)	INLET ELEV BIE (FT)
3	298.00	PVC	301.00	48	24	302.71	48	24	298.00
3	290.79	PVC	292.40	48	24	297.38	48	24	290.79
3	292.00	PVC	N/A	48	24	294.00	48	24	289.00

NOTES:

ALL ORIFICES ON PERMANENT RISER BELOW TEMPORARY RISER EXTENSION SHALL HAVE WATER-TIGHT TEMPORARY SEALS PROVIDED. TEMPORARY STUB INVERT ELEVATION SHALL BE SET AT OR BELOW SEDIMENT CLEAN-OUT ELEVATION.

A ROPE SHALL BE ATTACHED TO THE SKIMMER ARM TO FACILITATE ACCESS TO THE SKIMMER ONCE INSTALLED.

SKIMMER SHALL BE INSPECTED WEEKLY AND AFTER EACH RUNOFF EVENT.
ANY MALFUNCTIONING SKIMMER SHALL BE REPAIRED OR REPLACED WITHIN 24 HOURS OF INSPECTION.

ICE OR SEDIMENT BUILDUP AROUND THE PRINCIPAL SPILLWAY SHALL BE REMOVED SO AS TO ALLOW THE SKIMMER TO RESPOND TO FLUCTUATING WATER ELEVATIONS.

SEDIMENT SHALL BE REMOVED FROM THE BASIN WHEN IT REACHES THE LEVEL MARKED ON THE SEDIMENT CLEAN-OUT STAKE OR THE TOP OF THE STONE BERM. SEE STANDARD CONSTRUCTION DETAIL #7-3 FOR CONFIGURATION OF STONE BERM.

STANDARD CONSTRUCTION DETAIL #7-2
SKIMMER ATTACHED TO PERMANENT RISER

NOT TO SCALE

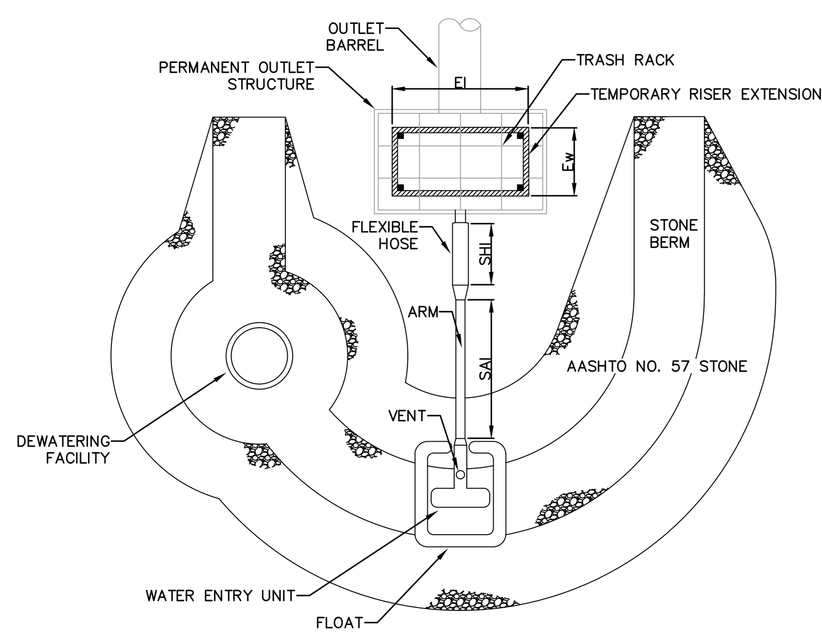

PLAN VIEW

NOTES:

NO GUIDE RAILS SHALL BE REQUIRED FOR THIS INSTALLATION.

THIS DETAIL SHALL BE USED IN CONJUNCTION WITH STANDARD CONSTRUCTION DETAILS #7-2 AND #7-4.

STANDARD CONSTRUCTION DETAIL #7-3
SKIMMER WITH STONE LANDING BERM

NOT TO SCALE

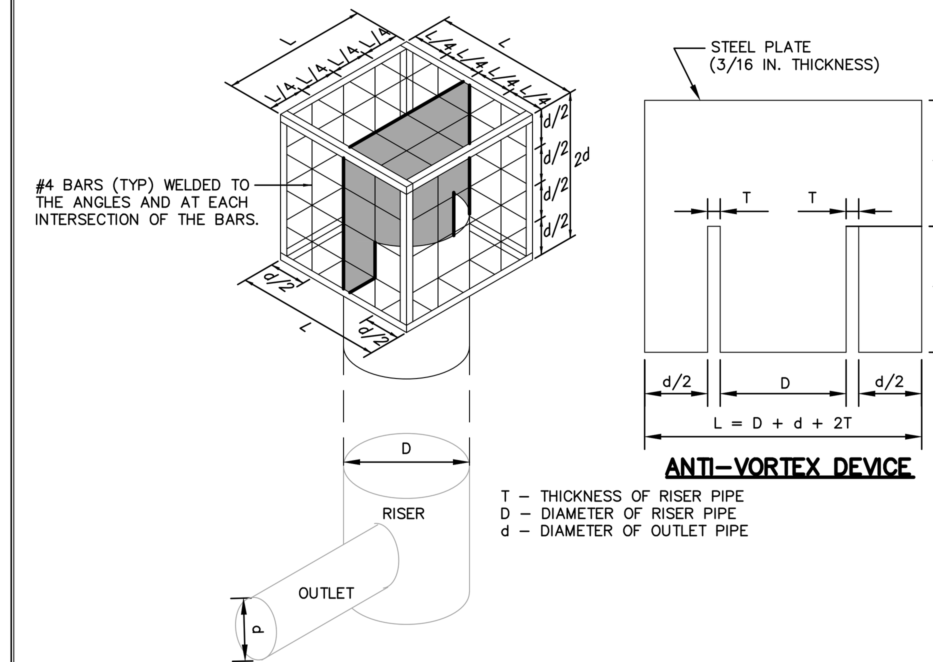

ANTI-VORTEX DEVICE

T – THICKNESS OF RISER PIPE
D – DIAMETER OF RISER PIPE
d – DIAMETER OF OUTLET PIPE

STANDARD CONSTRUCTION DETAIL #7-5
TRASH RACK AND ANTI-VORTEX DEVICE

NOT TO SCALE

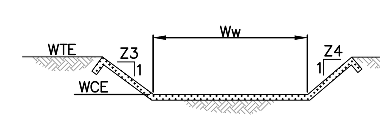

WEIR
SECTION Z–Z

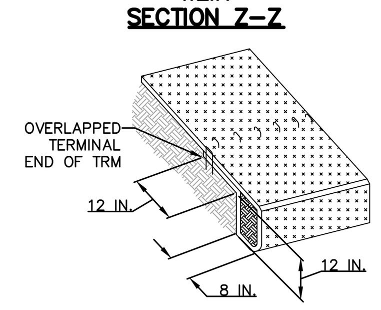

KEY TRENCH AT TOE OF SLOPE OF SPILLWAY

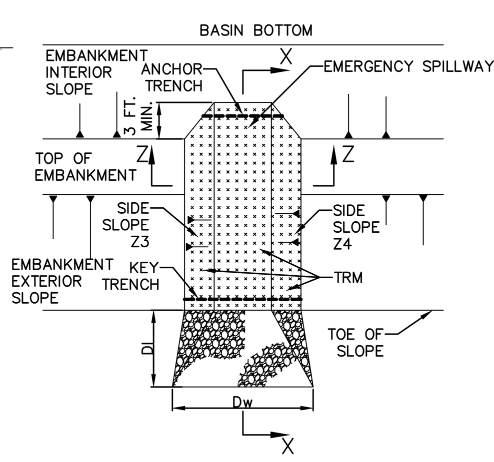

PLAN VIEW
RIPRAP OUTLET DISSIPATOR

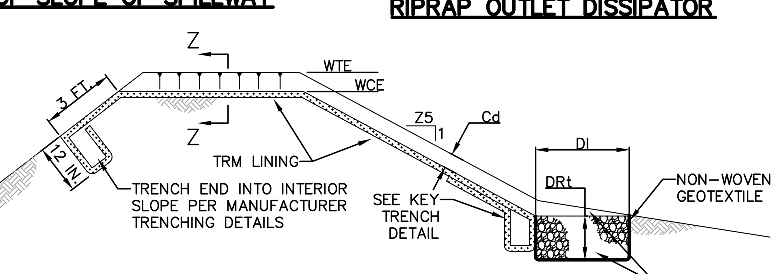

EMBANKMENT SECTION ALONG EMERGENCY SPILLWAY
SECTION X–X

BASIN NO.	WEIR					LINING		CHANNEL		DISSIPATOR			
	Z3 (FT)	Z4 (FT)	TOP ELEV WTE (FT)	CREST ELEV WCE (FT)	WIDTH Ww (FT)	TRM TYPE	STAPLE PATTERN	Z5 (FT)	DEPTH Cd (FT)	LENGTH Dl (FT)	WIDTH Dw (FT)	RIPRAP SIZE (R-_)	RIPRAP THICK. DRt (IN)
BASIN 1	3	3	305.00	303.00	50	P300	B	3	.5	5.5	10.5	3	9
BASIN 2	3	3	300.00	299.00	50	P300	B	3	.5	5.5	10.5	3	9

NOTES:

HEAVY EQUIPMENT SHALL NOT CROSS OVER SPILLWAY WITHOUT PRECAUTIONS TAKEN TO PROTECT TRM LINING.

DISPLACED LINER WITHIN THE SPILLWAY AND/OR OUTLET CHANNEL SHALL BE REPLACED IMMEDIATELY.

RIPRAP AT TOE OF EMBANKMENT SHALL BE EXTENDED A SUFFICIENT LENGTH IN BOTH DIRECTIONS TO PREVENT SCOUR.

THE USE OF BAFFLES THAT REQUIRE SUPPORT POSTS ARE RESTRICTED FROM USE IN BASINS REQUIRING IMPERVIOUS LINERS.

STANDARD CONSTRUCTION DETAIL #7-13
SEDIMENT BASIN EMERGENCY SPILLWAY WITH TRM LINING

NOT TO SCALE

TYPICAL STREAM CROSSING CONSTRUCTION SEQUENCE:

1. 50' BUFFER AREA SHOULD BE MAINTAINED AT STREAM CROSSINGS. CLEARING, SOD DISTURBANCES, EXCAVATION AND EQUIPMENT TRAFFIC SHOULD BE MINIMIZED IN THE BUFFER. STACKING LOGS, BURNING CLEARED BRUSH, DISCHARGING RAINWATER FROM TRENCHES, WELDING PIPE SECTIONS, REFUELING AND MAINTAINING EQUIPMENT SHOULD BE ACCOMPLISHED OUTSIDE THE BUFFER.
2. STAGING AREAS SHOULD BE LOCATED AT LEAST 50 FEET FROM THE EDGE OF THE WETLAND, IF APPLICABLE.
3. INSTALL SAND BAG COFFER DAMS IN STREAM CHANNEL ON UPSTREAM SIDE OF CROSSING.
4. PLACE BYPASS PUMP AND HOSE IN UPSTREAM SIDE OF COFFER DAM. OUTLET HOSE SHOULD BE PLACED IN STREAM CHANNEL INLINE WITH NORMAL STREAM FLOW TO AVOID SCOURING. INSTALL ROCK ENERGY DISSIPATER
5. PLACE SILT WATER PUMP IN WORK AREA. SUCTION END OF PUMP SHOULD BE PLACED IN PERFORATED 5 GALLON BUCKET SURROUNDED BY AASHTO #57 STONE. THE OUTLET HOSE SHOULD BE ATTACHED TO A PUMPED WATER FILTER BAG. THE PUMPED WATER FILTER BAG MUST BE PLACED ON LEVEL WELL VEGETATED GROUND BELOW WORK AREA.
6. NO CONSTRUCTION VEHICLES ARE PERMITTED TO ENTER STREAM CHANNEL.
7. INSTALL 48 IN. CULVERT AND CROSSING AT THE LOCATION SHOWN AND AS DETAILED.
8. REMOVE COFFER DAMS, ROCK FILTER, SILT WATER PUMP AND BYPASS PUMP AND HOSE.
9. COVER BANKS WITH EROSION CONTROL BLANKET AND SEED WITH PERMANENT SEED SPECIFICATION. ALL DISTURBED AREAS WITHIN 50 FEET OF TOP-OF-BANK SHALL BE BLANKETED OR MATTED WITHIN 24 HOURS OF INITIAL DISTURBANCE. APPROPRIATE STREAMBANK PROTECTION SHALL BE PROVIDED WITHIN THE CHANNEL.

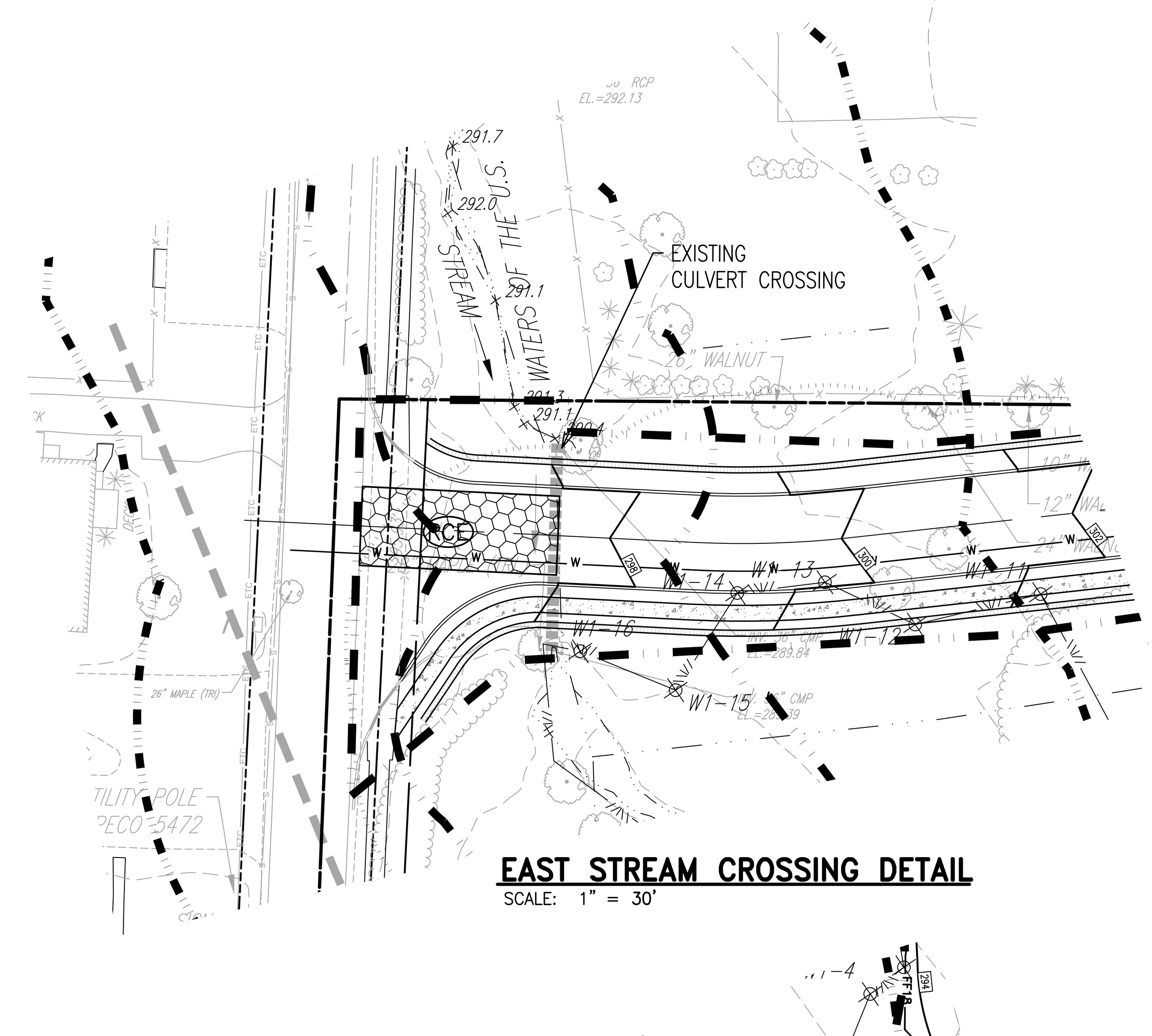

EAST STREAM CROSSING DETAIL

SCALE: 1" = 30'

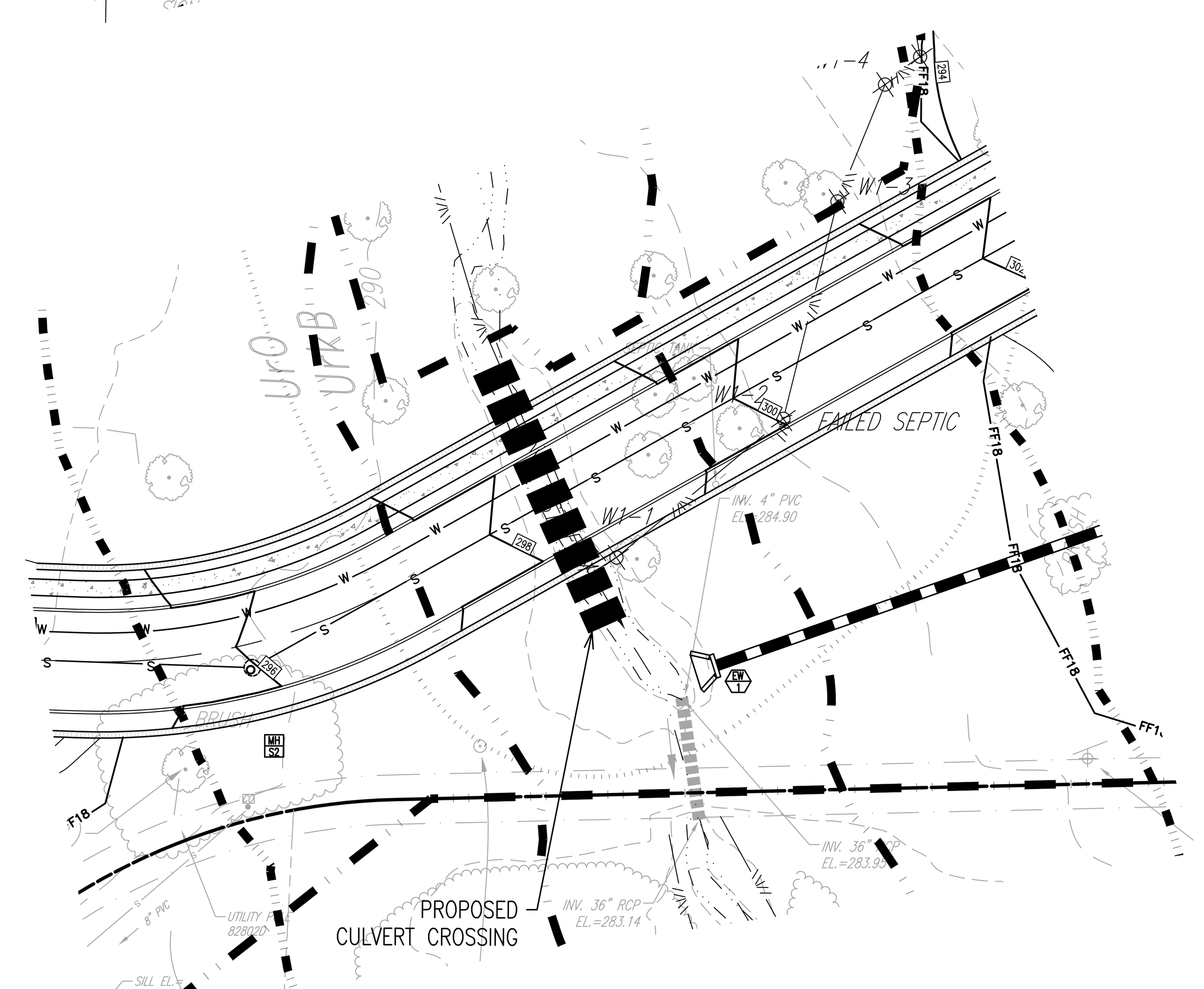

WEST STREAM CROSSING DETAIL

SCALE: 1" = 30'

DLHowell
Civil Engineering
Land Planning
Environmental
www.DLHowell.com
1250 Wrights Lane
West Chester, PA 19380
Phone: (610) 918-9002
Fax: (610) 918-9003

REV.	DATE	DESCRIPTION
1		
2		
3		
4		
5		
6		
7		
8		

PRELIMINARY
EROSION CONTROL DETAILS

CLIENT: MITCHELL HOMES
PROJECT: SMITH PROPERTY
LOCATION: 548 ROSEDALE ROAD KENNETT TOWNSHIP, CHESTER COUNTY, PA

DATE:	04/30/19
SCALE:	1"=50'
DRAWN BY:	JTE
CHECKED BY:	JWB
PROJECT NO.:	3388
CAD FILE:	09 EROSION CONTROL PLAN.dwg
PLOTTED:	04/30/19
DRAWING NO.:	C05.5
SHEET	13 OF 27

Q:\CIVIL 3D JOBS\3388\3388 PRODUCTION PLANS\SHEET SET\SUBDIVISION & LD\09 EROSION CONTROL PLAN.DWG

COPYRIGHT 2016 D.L. HOWELL & ASSOCIATES, INC. – ALL RIGHTS RESERVED. THESE PLANS ARE THE PROPERTY OF D.L. HOWELL & ASSOCIATES, INC. ANY USE OR REPRODUCTION OF THESE PLANS IN WHOLE OR PART, WITHOUT THE WRITTEN PERMISSION OF D.L. HOWELL & ASSOCIATES, INC. IS FORBIDDEN.